PanJit Touch Screen Installation and Design Guide

Part I

PanJit Resistive Touch Screen introduction

PanJit provides variety of resistive touch screen including 4-wire, 8-wire and 5-wire general touch screen, also sunlight readable touch screen with additional optical films onto the functional touch screen, and some unique design with EMI shielding and heating functionality.

To simplify the mechanical design on the customer side and the installation, different PanJit resistive touch screens are equipped with similar structure which is almost 100% suitable to the guide described below.

Operation theory

There are two major parts of resistive touch panel: ITO film and ITO glass. Two conductive layers are separated and isolated by the dot spacers scattered evenly on the ITO glass. Only when the proper activation force is applied onto the ITO film, these two conductive layers are contacted and the analog signal (the voltage) will be sent out to the touch screen controller then transferred into digital signal for system processing.

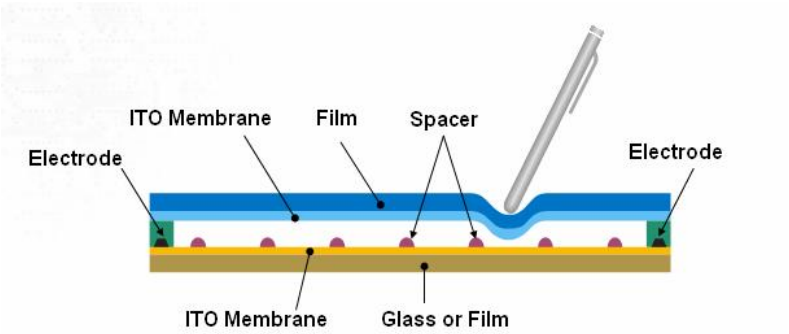

Structure and drawing definition

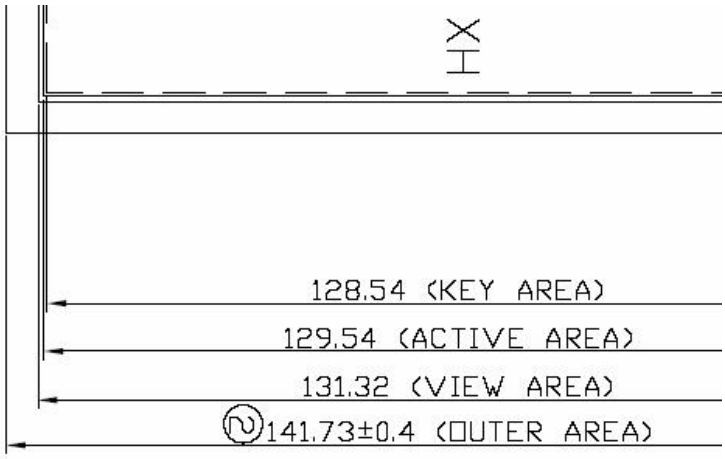

Definition:

Outer area: the outside dimension of the touch screen

View area: the transparent area of the touch screen

Active area: the operating area of the touch screen

Key area: the most proper operating area of some types of touch screen

Part II

Mounting guide

There are several methods of the touch screen mounting, here we only recommend two: one is mounting on the front cover of the display, the other is mounting on the LCD directly. For these two types of mounting, PanJit come out the guide before you design and install the touch screen into your system.

Definition

Bezel opening

The real mechanical viewable area of the whole system, normally it is the inner mechanical edge of the bezel.

Gasket

The buffer layer between two objects, especially for touch screen and bezel or for touch screen and LCD module.

Mounting on the front cover of display

Illustration

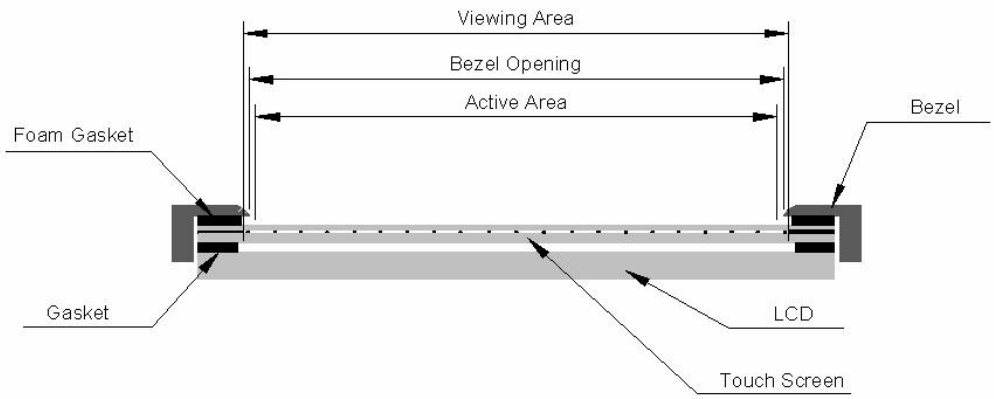

Clearance recommendation

General rule

When assembly the touch screen with the front bezel, we recommend the front bezel opening, should lie between the active area and view area, in some case if the mechanical design prefers to cover the active area, i.e., to diminish the bezel opening, the foam gasket should be still exits outside the active area.

Rule one

For pen input in 4w and 8w design, PanJit recommends a key area which means the best area for your pen input application. Normally the key area keeps 3mm safe distance from view area to avoid the ITO damage by the pen input.

Rule two

For finger input, 5-wire or sunlight readable touch screen design, the limitation above is not applied.

Rule three

There should be gasket installed between touch screen and LCD, when these two objects are contacted, the ripple condition could be happened. If chemical strengthened glass is chosen as the ITO glass substrate, an additional 0.4% curve should be considered in the mechanical design (for general glass, 0.15% is considered), so the designer should leave enough vertical space for Lx0.4% in order to avoid the contact between touch screen and LCD.

Rule four

For sunlight readable touch screen, sometimes the optical film layer area is smaller than the ITO film, in this case plus the water proof sealing, we recommend the gasket and the sealing material should be applied onto the area outer the optical film layer so that the optical film could have enough space to extend in the high temperature condition.

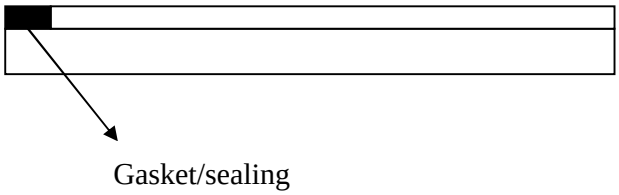

Rule five

There are sometimes some conductive particles left on the edge of the touch screen, especially on the ITO film edge, so when assembly, we recommend that the bezel or any other objects which could contact the edge of touch screen should be electrical isolated.

Rule six

The path of the tail is very critical. Before arriving the controller A/D converter, the analog signal is very easy to be affected by many noise signals existing in the system, especially the high-voltage inverter. We recommend that the tail should not go through the LCD inverter to avoid the signal interference.

Tail bending limitation

Tail is a flexible printable circuit (FPC) structure with flexibility on curving, but there are still two limitations on installation to prevent the damage of the FPC or reduce the reliability of the FPC.

Case 1:

The bent radius of PanJit touch screen should be greater than 2.5mm

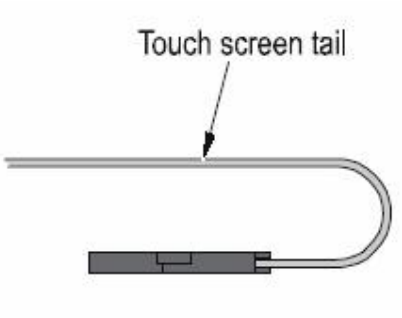

Case 2:

The bent position of the FPC should be greater than 3mm from the edge of the touch screen.

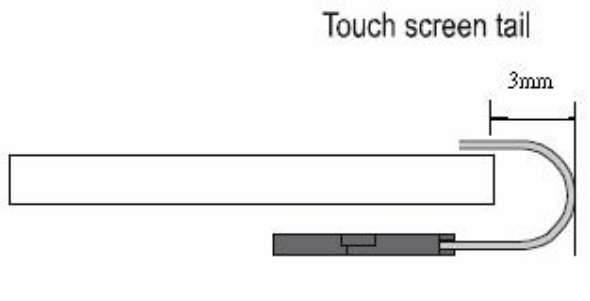

Mounting on the LCD directly

PanJit touch screen can be mounted onto the LCD directly, for this case, the rules listed in the bezel mounting should be also considered plus the rule listed bellows:

Rule seven

If the adhesive is a must, the double-side adhesive applied on the LCD and touch screen should be better rubber adhesive so that the adhesiveness would not break the touch panel if the disassembly is executed. PanJit can recommend some proper types of adhesive in such kind of mounting.

Part III

Assembly Notes

Note one

The assembly environment is suggested to be air-conditioned and clean, a clean room with at least class 100K is recommended.

Note two

Operator should assemble the touch screen with gloved hands

Note three

Do clean the touch panel and remove the dust before assembly, if necessary, clean the touch panel gently by non-woven and 80% diluted alcohol.

Note four

Always take the touch panel on the edges of touch screen, the longer sides are more suggested. Do not take the touch panel on the tail.

Note five

Please do assemble the touch panel into the bezel or the system with 15 degree lying angle. 75 degree or above is prohibited.

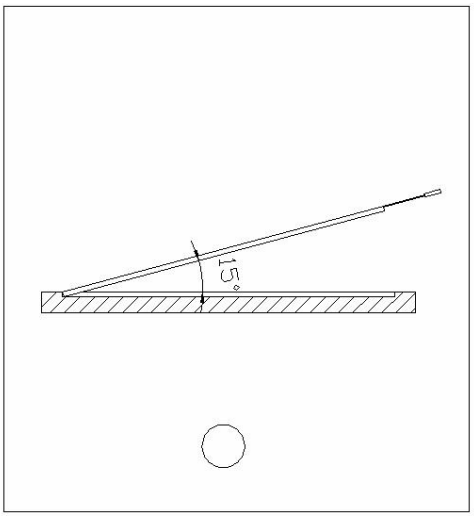

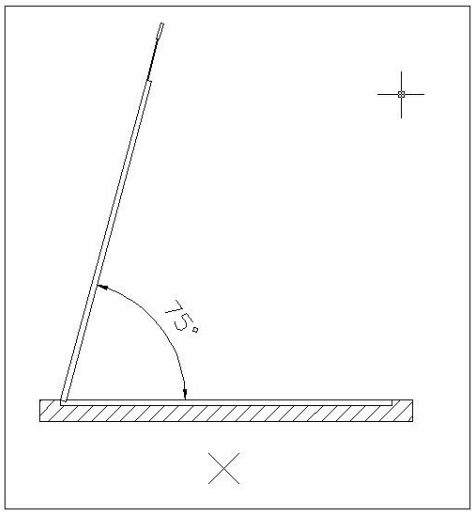

Note six

The force on the ITO film side (the area outer view area) should be uniform and evenly applied in the assembly. It should be not greater than 3 psi (0.21kg/cm2)for continuous force and 5 psi (0.35kg/cm2) for concentrative force.

Note seven

Store the un-integrated touch screen with tail fat-lying, and do not stack the touch panels with one another.

www.panjittouchscreens.com